Design and Rating for Curved Steel I- and box-girder Bridge Structures

C. C. Fu, Ph.D., P.E.
the BEST Center
Department of Civil Engineering
University of Maryland
prepared for the TRB 2001

Approximate Analysis Method

- Bridge deck
- Live load distribution factor
- Effective flange width(shear lag)
- Live load influence line
- Software package

Refined Analysis Methods

- Grillage analogy method
- Orthotropic plate method
- Articulated plate method
- Finite strip method
- Finite element method
- Software package

DESCUS - I & II

Design, Analysis & Rating

of

Curved Steel

I-Girder and Box-Girder

Bridge System

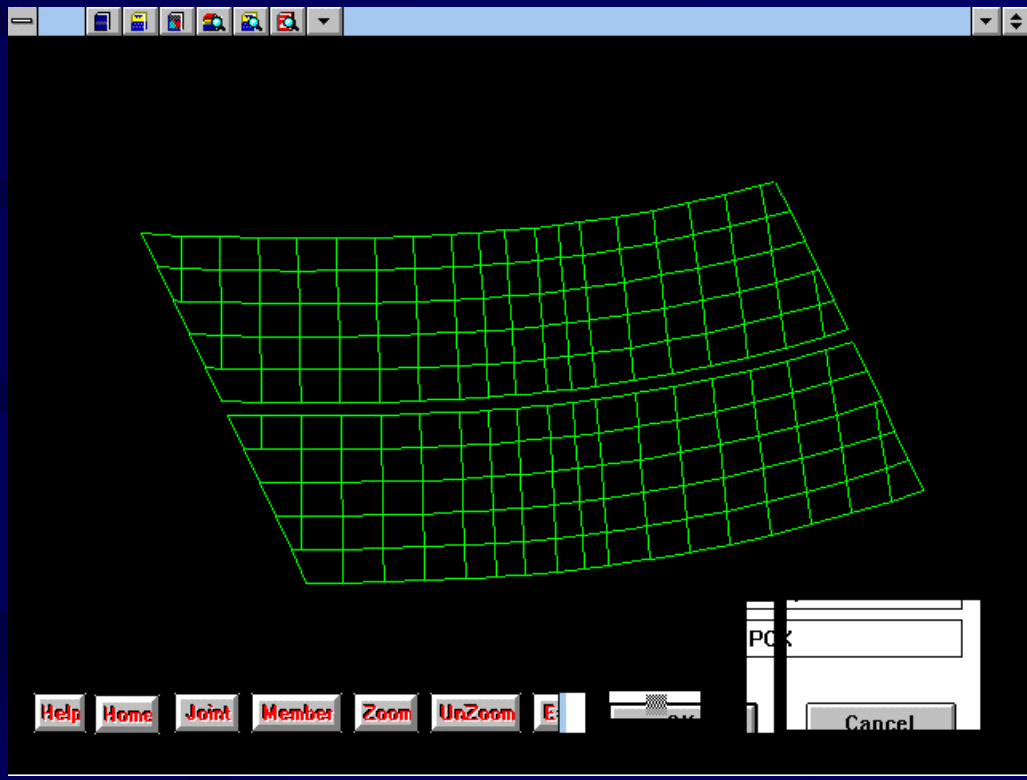

DESCUS I & II Development

- Began in 1976 & 1980, respectively
- Microcomputer version (DOS) with graphic interface in 1988
- used in numerous projects by FHWA, state agencies & consulting firms
- SI & Rating version in 1994
- WINDOWS, WINDOWS/NT & Network version in 1997
- LRFD live loading version in 1998
- New AASHTO Guide Specifications (future; including LRFD curved bridge code)

DESCUS-I Banner Page

Descus-I Program

Exit Input Run Print Help

DESCUS AutoMESH Utility

Auto Mesh

File Edit Input Screen Help

Open

C:\WDes1\Test2a.msh

Title and Subtitle

DATA TYPE : 0101, 0201

COORDINATE SYSTEM: 1

TITLE: connector L 255-255 Unit

NUMBER OF CURVES: 2

SUBTITLE: PRELIMINARY RUN # 2

General Data

DATA TYPE : 0301, 0401, 0501 and 0701

REFERENCE DATA :

REFERENCE STATION: 11376.72

REFERENCE RADIUS: 10000.0 (Ft. or m)

CURVE ANGLE

DEGREES: 60 (If 1st curve is "T", Angle = 0)

MINUTES: 00

SECONDS: 00

GIRDER DATA :

NO. OF GIRDERS: 5

SPAN DATA :

NUMBER OF SPANS: 5

STARTING STATION: 11606.990

SECTION DATA :

COMPRESSION FLANGE WIDTH: 12. (in or mm)

YIELD STRESS: 50. (Ksi or MPa)

CONSTRAINT SPACING: 20. (Ft. or m)

SPA RED. FACT FOR NEG. MOMENT: 1. (Ft. or m)

Curve Data

DATA TYPE :0202

CURVE NO.	STARTING STATION	ENDING STATION	CUR TYPE	DEGREE OF CURVE DEG.	MIN.	SEC.	CURVE LENGTH (Ft. or M)
1	11376.720	11676.720	S	7	30	00	300.00
2	11676.720	12144.870	C	5	00	00	

GIRDER NUMER	DISTANCE FROM MAINLINE (Ft. or m.)
1	-30.0
2	-20.0
3	-10.0
4	0.0
5	10.0

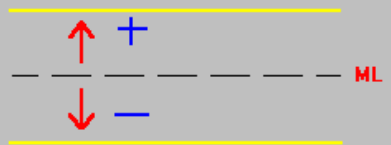

DESCUS AutoDF Utility

Distribution Factor

File Edit Input Screen Help

C:\WDes1\FFILES\sampler.df

DATA TYPE : 0601, 0602

NO. GIRDER SPACINGS 4

SPAN NO. FROM 1 TO 2

LOAD PATTERN ID 0-Loading every lane widths

GIRDER TO END or GIRDER TO GIRDER SPACINGS (Ft. or m.)

1.	1.6	9.	
2.	8.	10.	
3.	8.	11.	
4.	8.	12.	
5.	1.6		
6.			
7.			
8			

Lane

DATA TYPE : 0701, 0703

NUMBER OF DESIGN LANES 2

DESIGN LANE WIDTH 12. (Ft. or m)

TRUCK WHEEL BASE WIDTH (Ft. or m) (default = 6 feet or 1.8m)

LEFT WHEEL FRACTION

RIGHT WHEEL FRACTION

(Default=0.5, assume no superelevation and centrifugal force; if other than 0.5, Truck DF of DESCUS Data Type 0303 will be generated.)

LOADED LANE OPTION 0-Multi Lane Loaded

2ND TRUCK WHEEL BASE WIDTH (Default as the 1st truck)

Distance

Lane Width

lane1 lane2

DISTANCE OF LEFT EDGE OF EACH DESIGN LANE TO LEFT EDGE OF CROSS SECTION. (Ft. or m.)

ID

1 5.1 7

DESCUS-I Input Utility

Descus I - Input Utility

File Edit Input Screen Go To Graphic Auto-Mesh Auto-DF Help

C:\WDes1\FILES\sampler.dat

Input Screen #15

DATA TYPE : 0501A

STEEL PLATE GIRDERS

SECT. NO.	Fy or Ksi MPa	WEB DEPTH (In or mm)	WEB THICK (In or mm)	FLANGE TOP WIDTH (In or mm)	FLANGE TOP THICK (In or mm)	FLANGE BOTTOM WIDTH (In or mm)	FLANGE BOTTOM THICK (In or mm)	MEMB TYPE	* HYBRID OPTION Fy (Top FL) (Ksi or MPa)	* HYBRID OPTION Fy (Bot FL) (Ksi or MPa)
1	50.	42.	.3125	12.	.75	16.	1.25			
2	50.	42.	.3125	16.	2.	20.	2.			

Zr PER CONN. (Kips KN)	GIRD NO.	NO. CONN.	Zr PER CONN. (Kips KN)
115	4	3	8.115

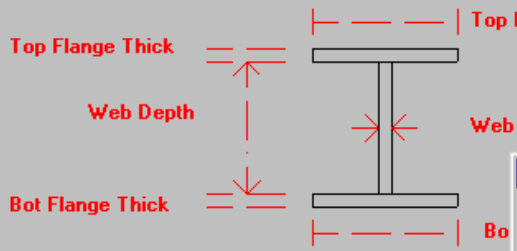

* If blank, homogeneous section is assumed.

PLOT SCALE 10.0

COMPOSITE/NONCOMP 1 1=Composite

SHEAR CONNECTORS 0 0=No

Input Screen #16

DATA TYPE : 0501B

TRUSS DIAPHRAGM SECTION

SECT. NO	Fy or Ksi MPa	MEMB TYPE	AREAS TOP In^2 cm^2	AREAS BOTTOM In^2 cm^2	AREAS DIAGONAL In^2 cm^2	DISTANCE BETWEEN CHORDS In mm
3	50.	10	2.4	2.4	2.4	36.

Type 10

DESCUS-II Input Utility

Win Descus II - Input Utility

File Edit Input Screen Go To Graphic Auto-Mesh Auto-DF Help

Dn Up C:\WDes2\Sampler.dat

Project Description and System Options

DATA TYPE : 0101, 0102, 0103 AND 0105

PROJECT DESCRIPTION AND SYSTEM OPTIONS

DESCRIPTION	SAMPLE1.DAT	
	2 BOX GIRDER 2-SPAN COMPOS	
OUTPUT LEVEL	2	2=Secondary
UNIT	0	0=English
SPAN INTERVAL	10	
PROGRAM OPTINS	3	3=RATING

Steel Box Sections

DATA TYPE : 0501

STEEL BOX SECTIONS

SECT. NO.	DET. NO	OPS	Fy Ksi or MPa	ANGLE BETWEEN WEB VERTICAL	WEB DEPTH In or mm	WEB THICK In or mm	FLANGE TOP WIDTH In mm	FLANGE TOP THICK In mm	FLANGE BOTTOM WIDTH In mm	FLANGE BOTTOM THICK In mm	INTERNAL BRACING EQUIV. PLATE THICK In or mm	INTERNAL BRACING DIST. TO PLATE In or mm
1	1		50.	11.77	72.	.563	18.	1.00	60.	0.50	.075	4.874
2	2		50.	11.77	72.	.563	24.	1.25	60.	1.375	.075	5.25
3		1										

Section Details

DATA TYPE : 0503

SECTION DETAILS

DETAIL NO	EFFECT. SLAB WIDTH (In or mm)	AREA OF REIN. STEEL (In^2 or mm^2)	DISTANCE FROM SLAB BOT. TO STEEL (In or mm)	BOTTOM FLANGE STIFFENERS NO.	FLANGE WIDTH (In or mm)	FLANGE THICK.	STEM WIDTH (In or mm)	STEM THICK.	NO TOP STIFFENER	WEB STIFFENERS WEB WIDTH	WEB STIFFENERS THICK	WEB STIFFENERS DEPTH (In)
1	174.000											
2	174.000											
3												

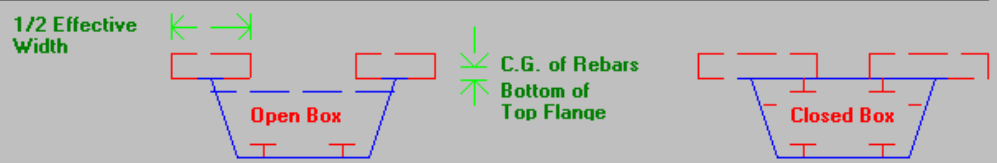

TOTAL DEPTH (In or mm)

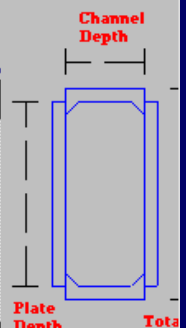

DESCUS Print & Graphic Utilities

Win Descusl - Print Utility - C:\Wdes1\Files\Sampler.res

File View Print Find

```
1.1 SYSTEM OPTIONS AND SHEAR CONNECTOR DATA
1.2 GENERAL CONTROL OPTIONS
1.3 LIVE LOAD DISTRIBUT
1.4 DETAILS AND LOADING
1.5 DEFINITION OF BENDI
1.6 DEFINITION OF GIRDE
1.7 DEFINITION OF GIRDE
1.8 DEFINITION OF DIAPH
```

Win - Descusl Graphic Utility

Exit Home Joint Member Zoom UnZoom Rotate Print Help

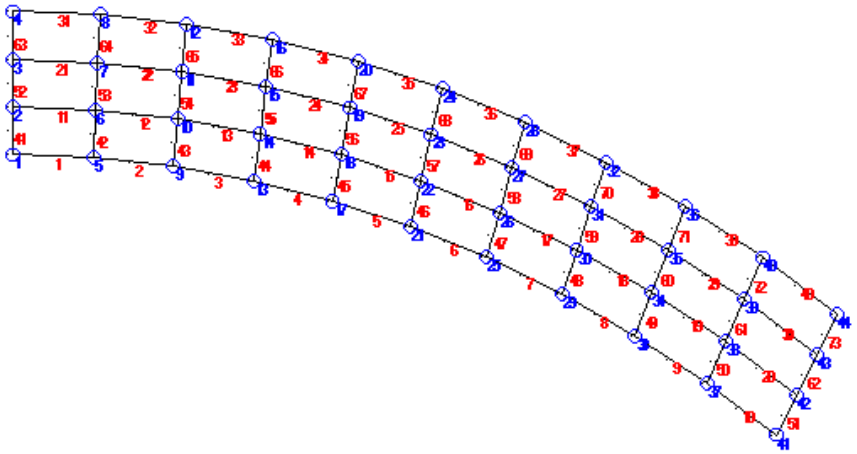

```
TABLE 1.1 SYSTEM OPTIO
          ------------


SYSTEM OPTIONS
--------------

OUTPUT S   SPAN     PROG
LEVEL  I INTERVAL OPTI

   2   0    10

SHEAR CONNECTOR DATA
--------------------

GIRDER  NO.       ZR
  NO.  SHEAR      PER
       CONN       CONN              CONN      CONN              CONN      CONN
                 (KIP)                      (KIP)                      (KIP)

   1      3      8.115       2       3      8.115       3       3      8.115
   4      3      8.115
```

Flowchart for the Curved Steel Bridge Design and Load Rating

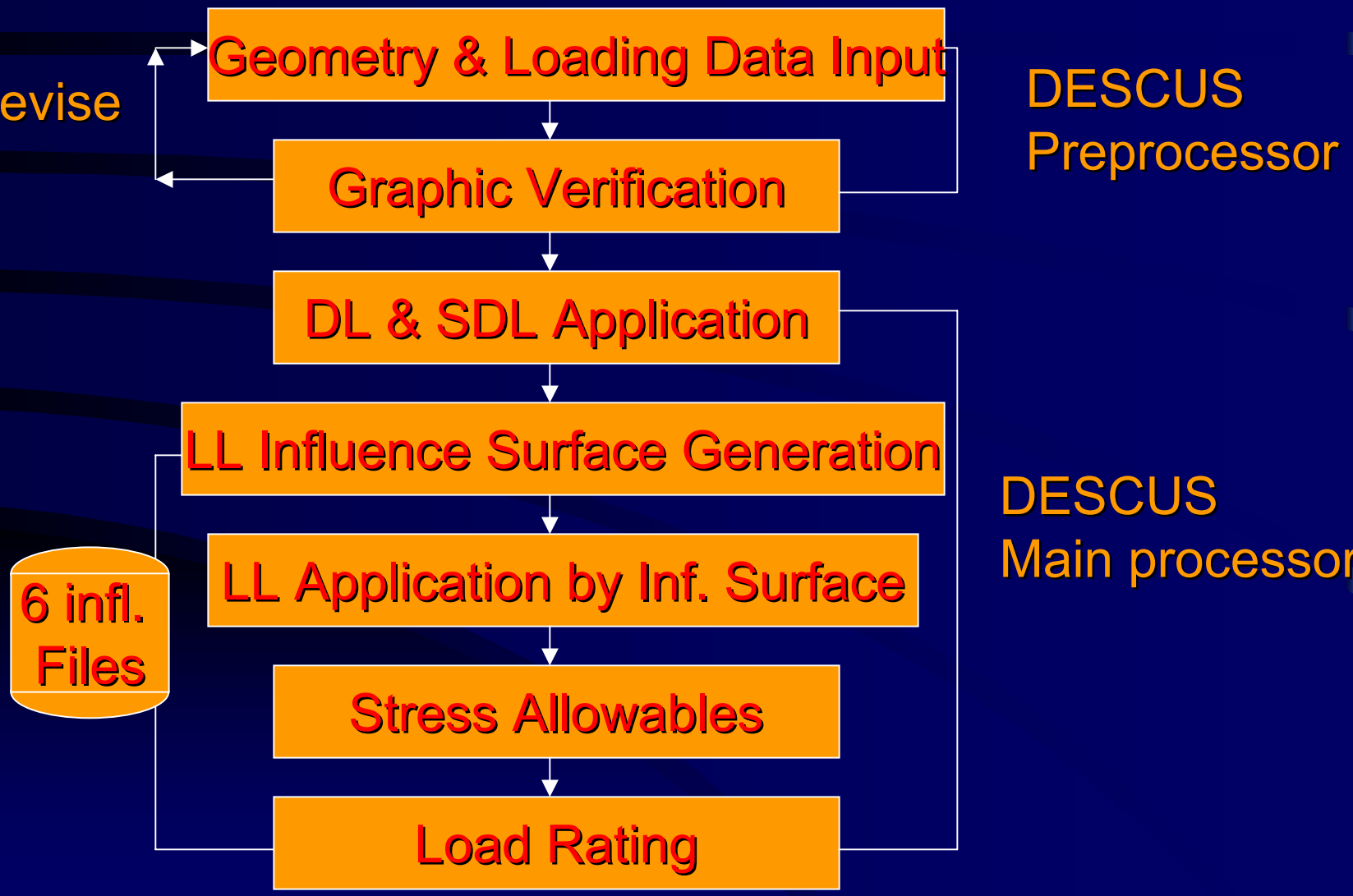

DESCUS-I Example Problem Framing Plan

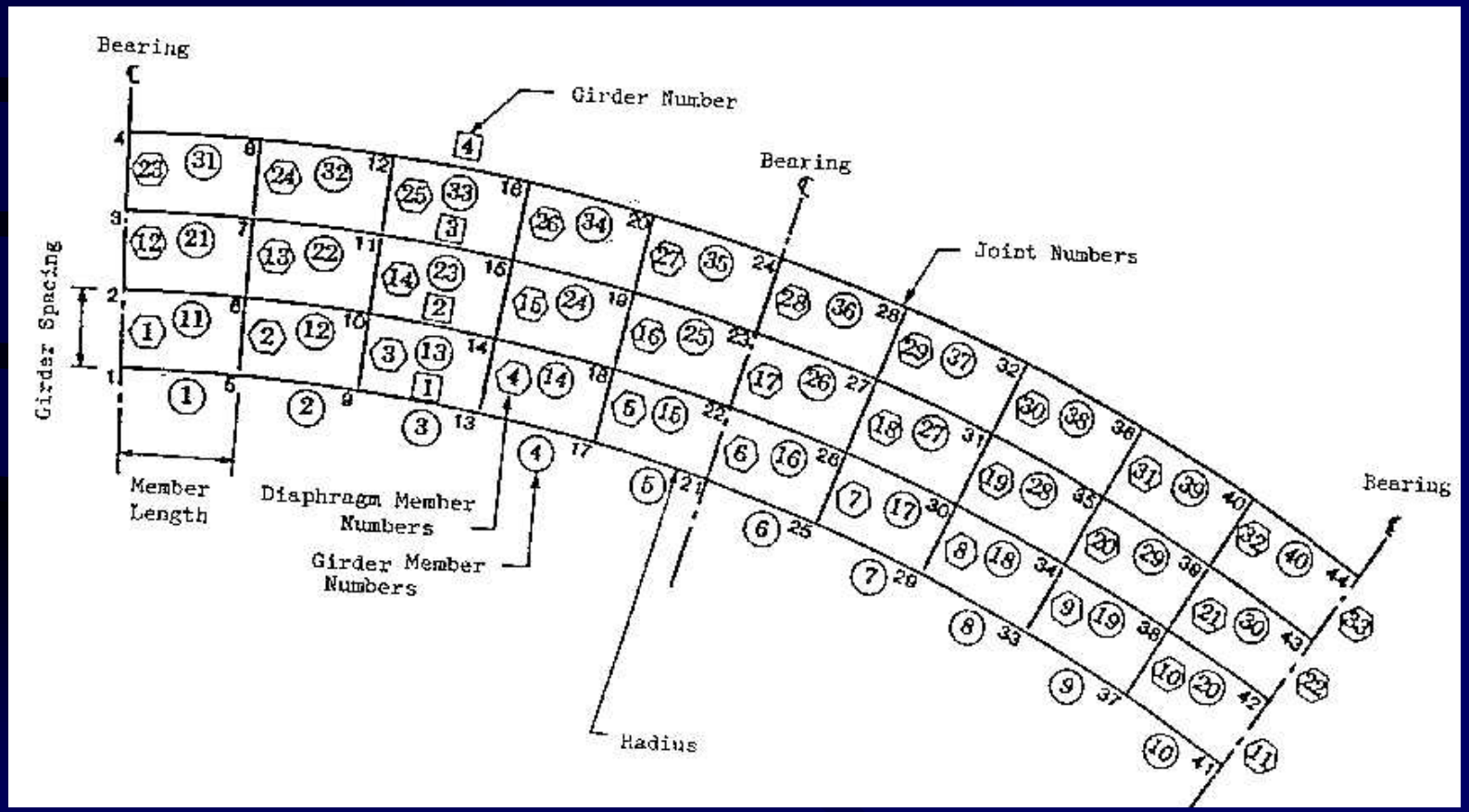

DESCUS-I Moment Influence Lines for Joint 3 of Girder 2

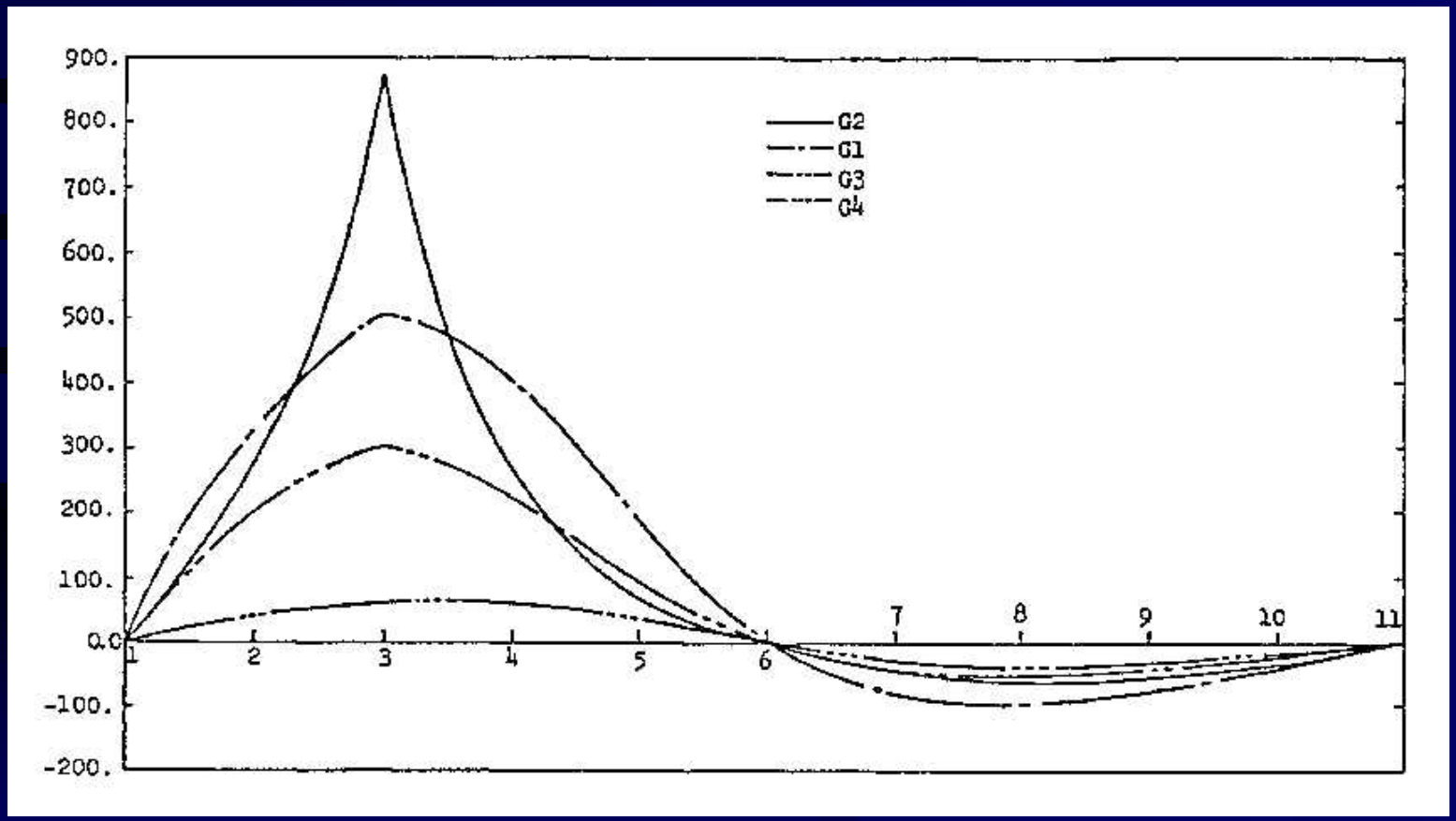

DSCUS-I Moment Influence Lines for Joint 6 of Girder 2

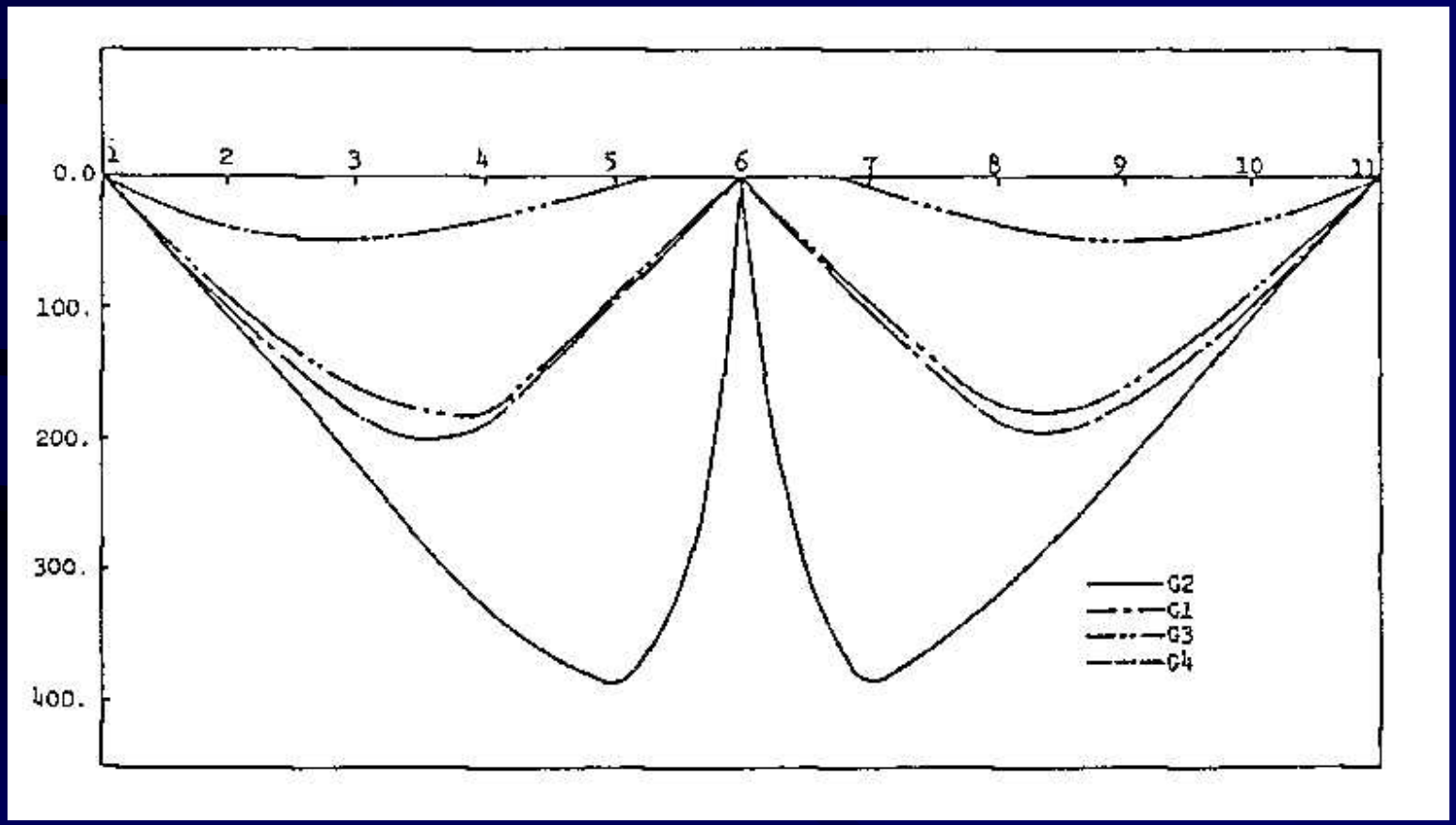

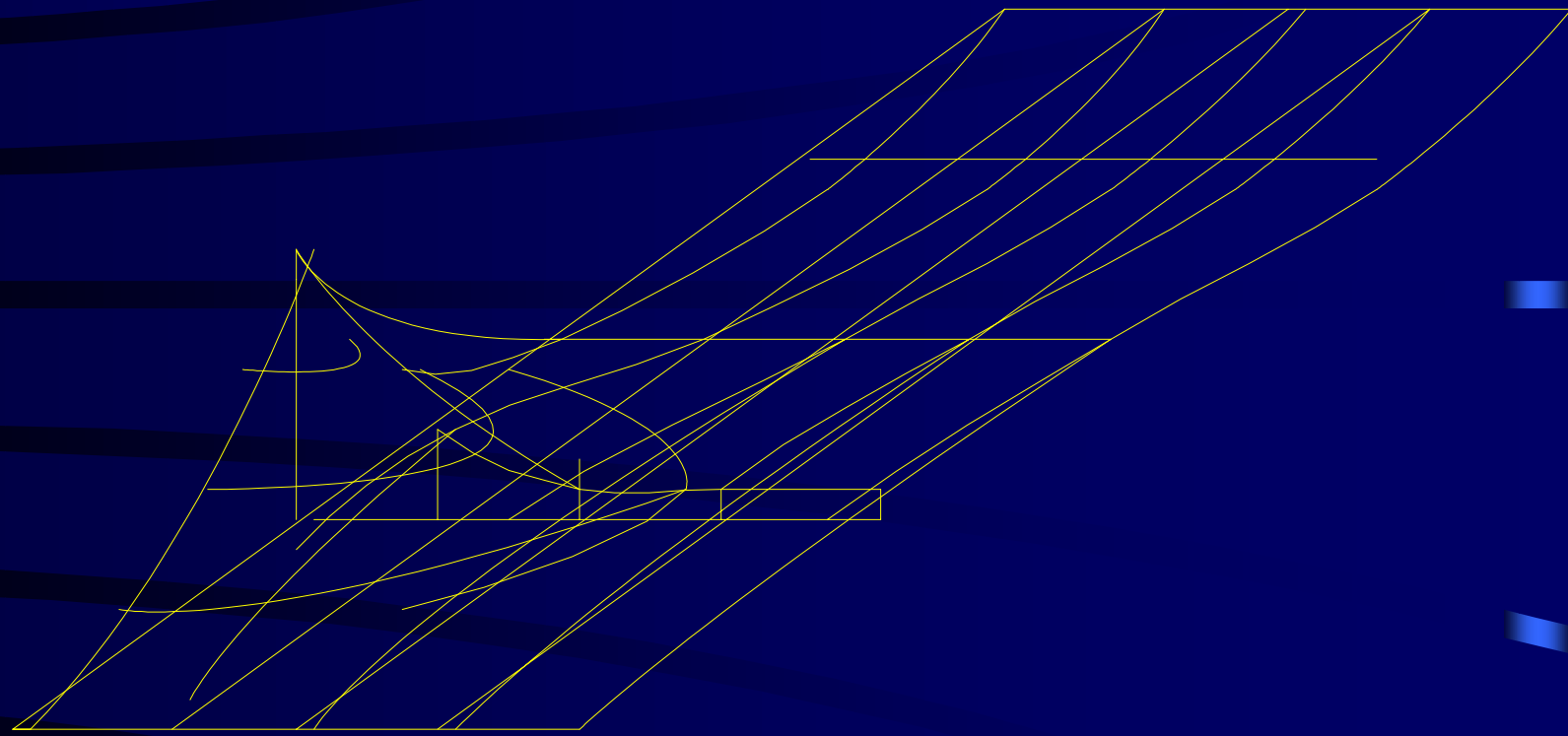

MOMENT INFLUENCE SURFACE

Placement of Live Load on Influence Surface

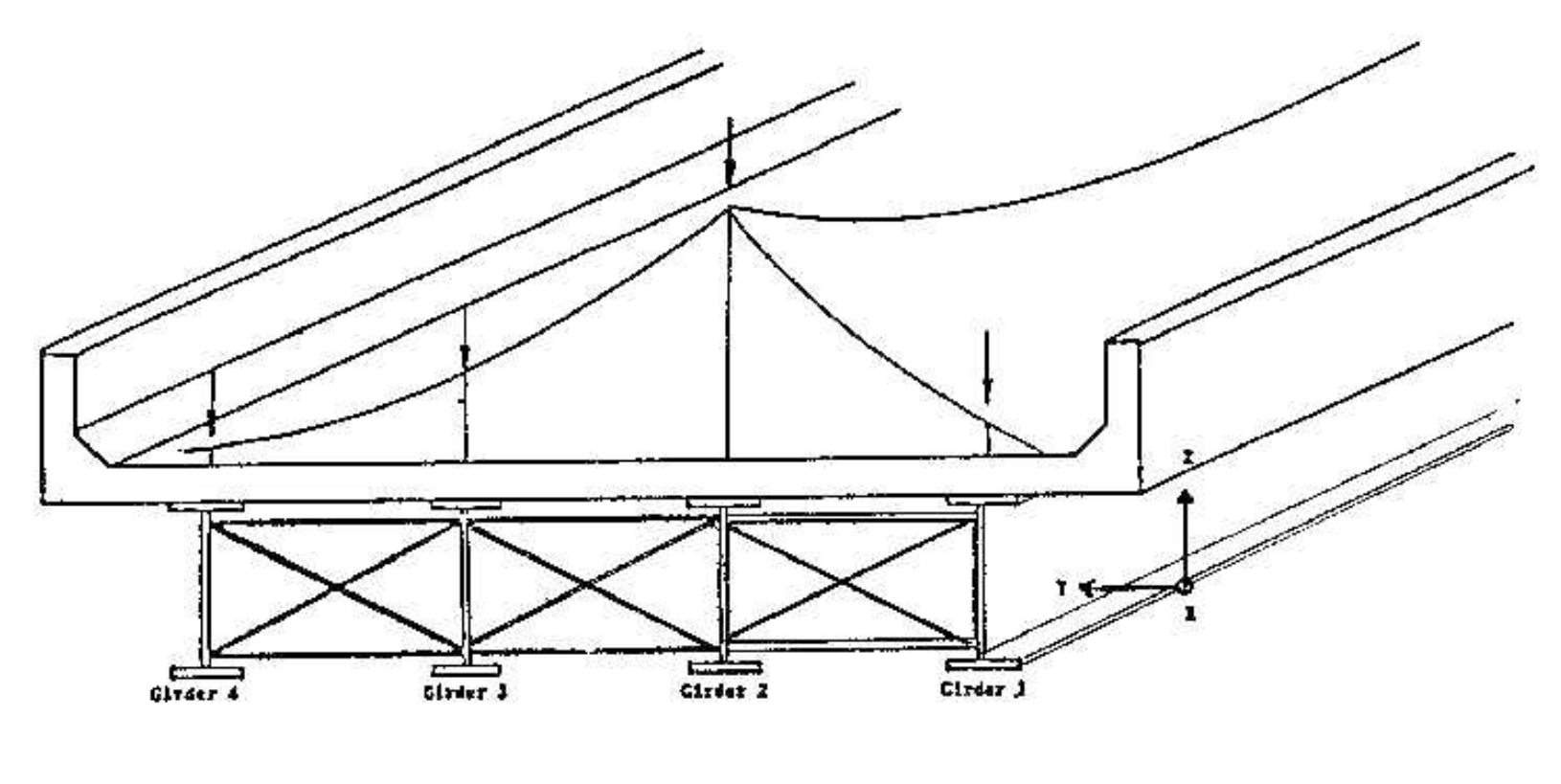

Components of Normal Stresses

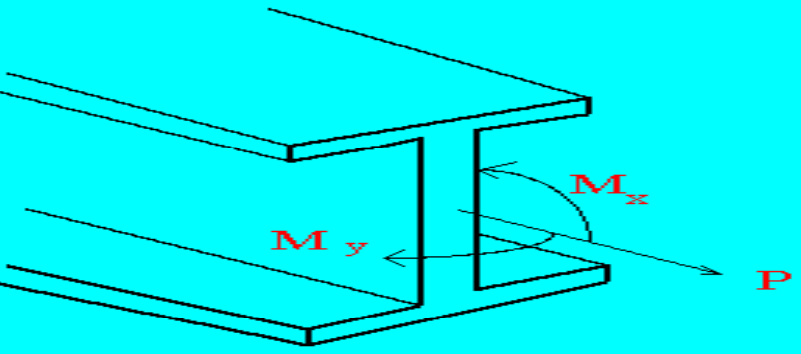

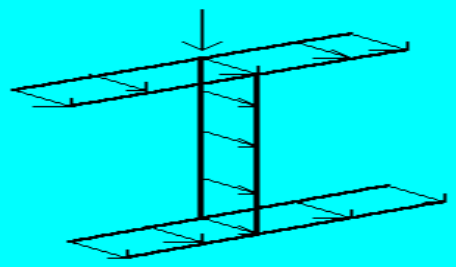

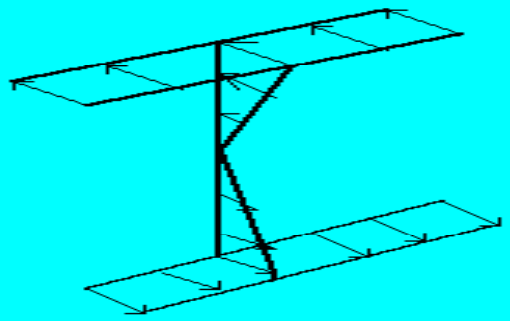

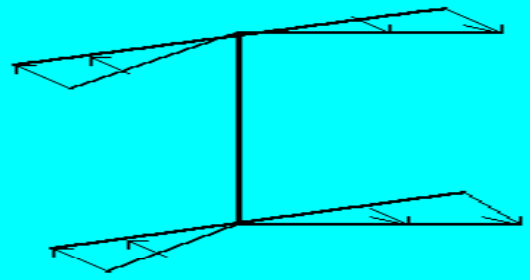

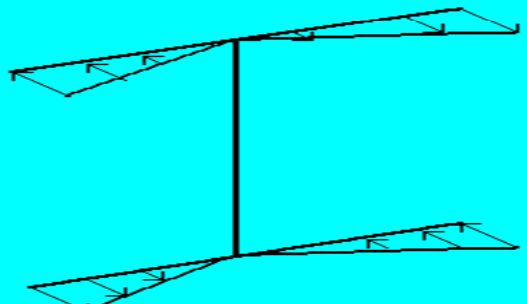

$$\sigma = \frac{P}{A} + \frac{M_x y}{I_x} + \frac{M_y x}{I_y} +$$ warping normal stress

Working Stress Design (WSD)

1.a - For Compression flange braced by cross-frames or diaphragms,

$f_b \leq F_b$ (Eq. 1)

& $f_b + f_w \leq 0.55F_y$ (Eq. 2)

1.b - For compression top flange within hardened concrete,

$f_b + (f_w)_{DL} \leq 0.55F_y$ (Eq. 3)

1.c - For tension flange,

$f_b + f_w \leq 0.55F_y$ (Eq. 4)

Load Factor Design (LFD) & Load & Resistance Factor Design (LRFD)

2A Compact Section

2A.a - For compression flange braced by cross-frames or diaphragms,

$$f_b \leq F_{bu} \qquad \text{(Eq. 5)}$$

2A.b - For tension flange or compression top flange within hardened concrete

$$f_b \leq F_y \qquad \text{(Eq. 6)}$$

LFD/LRFD (cont.)

2B. Noncompact Section

2B.a - For compression flange braced by cross-frames or diaphragms,

$f_b \leq F_{by}$ (Eq. 7)

& $f_b + f_w \leq F_y$ (Eq. 8)

2B.b - For compression top flange within hardened concrete,

$f_b + (f_w)_{DL} \leq F_y$ (Eq. 9)

2B.c - For tension flange,

$f_b + f_w \leq F_y$ (Eq. 10)

Rating for Curved Steel Bridges

$$RF = [C - A_1 D]/[A_2 L(1+I)] \qquad \text{(Eq. 11)}$$

where

RF = the rating factor for the live load carrying capacity

C = the capacity of the member

For WSR: Inventory or operating level allowable stress

For LFR: Nominal capacity of structural steel including loss of section

For LRFR: Capacity based on as-inspected section properties multiplied by the resistance factor

DESCUS-I Code Check Output

Moments and Torsion

Shears

Diaphragm Axial Forces and Stresses

Reactions

Dead Load Deflections at Tenth Points

Maximum Live Load Deflections

Stress Ranges with Acceptable Categories

Shear Connector Spacing

Transverse Stiffener Requirements

Maximum and Allowable Stresses

Rating Factors by Girders

Bridge Rating Summary

DESCUS-I Code Check Output

Moments and Torsion

Shears

Reactions

Dead Load Deflections at Tenth Points

Maximum Live Load Deflections

Stress Ranges with Acceptable Categories

Shear Connector Spacing

Transverse Stiffener Requirements

Bottom Flange Longitudinal Stiffener Requirements

Maximum and Allowable Stresses

Rating Factors by Girders

Bridge Rating Summary

EXAMPLE PROBLEM

TABLE 5.2 MOMENT AND TORSION SUMMARY (UNFACTORED) GIRDER NO. 1

SP NO	IC NO	D L	FROM SUPP (FT)	BENDING MOMENT MAX (FT-K)	BENDING MOMENT MIN (FT-K)	DEAD LOAD TORSION DL (FT-K)	DEAD LOAD TORSION SDL (FT-K)	DEAD LOAD TORSION TOTAL (FT-K)	LIVE LOAD TORSION MAX (FT-K)	LD TYP	LIVE LOAD TORSION MIN (FT-K)	LD TYP
1	0		.0	.1	-.3	-2.0	1.1	-.9	2.2	HS	-11.9	HS
1	1		17.0	979.4	392.6	10.4	4.8	15.2	2.2	HS	-10.1	HS
1	2		34.0	1239.8	427.0	11.3	5.1	16.4	4.4	HS	-4.8	HS
1	3		51.0	927.4	117.4	8.5	4.1	12.6	5.2	HS	.0	
1	4		68.0	7.2	-583.9	-11.1	-2.1	-13.2	7.4	HS	-.6	HS
1	5		85.0	-1460.2	-2050.9	-35.7	-12.1	-47.8	3.6	HS	-3.6	HS
2	0		.0	-1460.2	-2050.9	-35.7	-12.1	-47.8	3.6	HS	-3.6	HS
2	1		17.0	7.0	-583.9	-11.1	-2.1	-13.2	.6	HS	-7.4	HS
2	2		34.0	927.3	117.4	8.5	4.1	12.6	.0		-5.2	HS
2	3		51.0	1239.9	426.9	11.3	5.1	16.4	4.8	HS	-4.4	HS
2	4		68.0	979.7	392.6	10.4	4.8	15.2	10.1	HS	-2.2	HS
2	5		85.0	.1	-.3	-2.0	1.1	-.9	11.9	HS	.0	

EXAMPLE PROBLEM

TABLE 6.1 SHEARS (UNFACTORED) GIRDER NO. 1

SPN NO	INC NO	D L FROM SUPP (FT)	DL+SDL (KIP)	LL+I MAX POS (KIP)	LOAD TYP	LL+I MAX NEG (KIP)	LOAD TYP	SHEAR RANGE	SIDEWALK POS (KIP)	SIDEWALK NEG (KIP)
1	0	.00	39.4	46.6	HS	-1.6	L	46.59	.0	.0
1	1	17.00	18.7	34.4	HS	-10.3	I	43.55	.0	.0
1	2	34.00	-7.8	22.3	HS	-19.6	HS	41.92	.0	.0
1	3	51.00	-27.4	14.0	HS	-29.1	HS	43.08	.0	.0
1	4	68.00	-52.4	6.6	I	-39.4	HS	44.76	.0	.0
1	5	85.00	-81.9	.0		-50.2	HS	50.20	.0	.0
2	0	.00	81.9	50.2	HS	.0	HS	50.20	.0	.0
2	1	17.00	52.4	39.5	HS	-6.6	I	44.88	.0	.0
2	2	34.00	27.4	29.1	HS	-14.9	HS	43.98	.0	.0
2	3	51.00	7.8	18.6	HS	-24.1	HS	42.65	.0	.0
2	4	68.00	-18.7	10.3	I	-34.4	HS	43.57	.0	.0
2	5	85.00	-39.4	1.6	L	-46.6	HS	46.59	.0	.0

EXAMPLE PROBLEM

TABLE 7.2 AXIAL FORCE AND STRESS TABLE FOR DIAPHRAGMS

(MINIMUM AND MAXIMUM FORCES AND STRESSES)
LOAD FACTOR DESIGN (ALL FACTORED)

SEQ NUM	MEM NUM	MEM TYPE	GIRDER NUM	GIRDER NUM	X OR K TOP CHORD FORCE (K)	X OR K TOP CHORD STRESS (KSI)	X OR K BOT CHORD FORCE (K)	X OR K BOT CHORD STRESS (KSI)	DIAGONAL FORCE (K)	DIAGONAL STRESS (KSI)
1	41	10	1	2	1.2	.51	-1.2	-.51	3.9	1.64
					-1.3	-.53	1.3	.53	-.3	-.13
2	42	10	1	2	6.3	2.61	-6.3	-2.61	-4.1	-1.71
					-3.9	-1.64	3.9	1.64	-22.7	-9.45
3	43	10	1	2	8.9	3.70	-8.9	-3.70	-2.8	-1.18
					-4.3	-1.79	4.3	1.79	-28.5	-11.86
4	44	10	1	2	9.3	3.89	-9.3	-3.89	1.4	.57
					-3.0	-1.26	3.0	1.26	-22.9	-9.53
5	45	10	1	2	8.9	3.70	-8.9	-3.70	10.7	4.44
					.2	.08	-.2	-.08	-4.0	-1.66
6	46	10	1	2	11.5	4.80	-11.5	-4.80	38.6	16.10
					8.2	3.41	-8.2	-3.41	33.8	14.09
7	47	10	1	2	8.9	3.70	-8.9	-3.70	10.7	4.44
					.2	.08	-.2	-.08	-4.0	-1.66
8	48	10	1	2	9.3	3.89	-9.3	-3.89	1.4	.57
					-3.0	-1.26	3.0	1.26	-22.9	-9.53
9	49	10	1	2	8.9	3.70	-8.9	-3.70	-2.8	-1.18
					-4.3	-1.79	4.3	1.79	-28.5	-11.86
10	50	10	1	2	6.3	2.61	-6.3	-2.61	-4.1	-1.71
					-3.9	-1.64	3.9	1.64	-22.7	-9.45
11	51	10	1	2	1.2	.51	-1.2	-.51	3.9	1.64
					-1.3	-.53	1.3	.53	-.3	-.13
12	52	10	2	3	.5	.22	-.5	-.22	1.3	.55
					-.6	-.26	.6	.26	-.8	-.32
13	53	10	2	3	10.0	4.16	-10.0	-4.16	-4.3	-1.77
					-4.4	-1.84	4.4	1.84	-28.6	-11.93
14	54	10	2	3	14.1	5.86	-14.1	-5.86	-5.8	-2.41
					-7.6	-3.18	7.6	3.18	-34.3	-14.30
15	55	10	2	3	10.9	4.54	-10.9	-4.54	1.1	.45
					-10.1	-4.19	10.1	4.19	-26.7	-11.13
16	56	10	2	3	4.0	1.66	-4.0	-1.66	12.9	5.38
					-8.7	-3.61	8.7	3.61	-7.4	-3.07
17	57	10	2	3	-.9	-.36	.9	.36	31.0	12.90
					-2.4	-1.01	2.4	1.01	28.8	11.99

NOTE: 1ST LINE IS MINIMUM AND 2ND LINE IS MAXIMUM.
TENSION IS POSITIVE AND COMPRESSION IS NEGATIVE.
DIAGONAL SHOULD BE DESIGNED FOR THE WORST OF TENSION
AND COMPRESSION.

EXAMPLE PROBLEM

TABLE 8.1 REACTIONS (KIPS) (UNFACTORED)

GD NO	SUPP NO	DEAD LOAD	LIVE LOAD MAX TYPE	LIVE LOAD MIN TYPE	LIVE LOAD MAX+I	LIVE LOAD MIN+I	TOTAL		
		(1)	(2)	(3)	(4)	(5)	(1+2)	(1+4+X)	(1+5+X)
1	1	39.7	37.1 HS	-2.1 HS	46.0	-2.6	76.8	85.7	37.1
1	2	182.7	60.2 L	.0	74.6	.0	242.9	257.3	182.7
1	3	39.7	37.1 HS	-2.1 HS	46.0	-2.6	76.8	85.7	37.1
2	1	45.8	44.0 HS	-2.6 HS	54.3	-3.2	89.8	100.2	42.6
2	2	175.0	61.4 L	.0	75.9	.0	236.5	251.0	175.0
2	3	45.8	44.0 HS	-2.6 HS	54.3	-3.2	89.8	100.2	42.7
3	1	51.1	44.8 HS	-3.6 HS	55.3	-4.4	95.9	106.4	46.7
3	2	204.8	67.1 L	.0	82.8	.0	271.9	287.6	204.8
3	3	51.1	44.8 HS	-3.6 HS	55.3	-4.4	95.9	106.4	46.7
4	1	56.7	43.4 HS	-7.3 HS	53.5	-9.0	100.2	110.2	47.7
4	2	173.0	62.6 L	.0	77.1	.0	235.6	250.1	173.0
4	3	56.8	43.4 HS	-7.3 HS	53.5	-9.0	100.2	110.2	47.7

EXAMPLE PROBLEM

TABLE 10.7A = STRESS RANGE WITH ACCEPTABLE CATEGORY GIRDER NO. 1

****

FATIGUE --- SERVICE LOADING

(1) : MAIN (LONGITUDINAL) LOAD CARRYING MEMBERS
(2) : ROAD TYPE II <--- AASHTO TABLE 10.3.2A
(3) : STRESS CYCLES -- AASHTO TABLE 10.3.1A

TRUCK LOADING = 500,000 CYCLES
LANE LOADING = 100,000 CYCLES

				TOP OF TOP FLANGE			BOTTOM OF BOTTOM FLANGE		
SP NO	IN NO	D L	FROM SUPT (FT)	GOVERN. LOADING	STRESS RANGE (KSI)	ACCEPTABLE STRESS CATEGORY	GOVERN. LOADING	STRESS RANGE (KSI)	ACCEPTABLE STRESS CATEGORY
1	0		.00	TR	.0	A B C D E E^ F	TR	.0	A B C D E E^ F
1	1		17.00	TR	1.9	A B C D E E^ F	TR	6.2	A B C D E E^ F
1	2		34.00	TR	3.4	A B C D E E^ F	TR	8.8	A B C D E E^ F
1	3		50.99	TR	4.9	A B C D E E^ F	TR	9.0	A B C D E E^ F
1	4		67.99	TR	13.9	A B C D F	TR	8.4	A B C D E E^
1	5		84.99	LA	4.9	A B C D E E^ F	LA	4.1	A B C D E E^ F
2	0		.00	LA	4.9	A B C D E E^ F	LA	4.1	A B C D E E^ F
2	1		17.00	TR	13.9	A B C D F	TR	8.4	A B C D E E^
2	2		34.00	TR	4.9	A B C D E E^ F	TR	9.0	A B C D E E^ F
2	3		50.99	TR	3.4	A B C D E E^ F	TR	8.8	A B C D E E^ F
2	4		67.99	TR	1.9	A B C D E E^ F	TR	6.2	A B C D E E^ F
2	5		84.99	TR	.0	A B C D E E^ F	TR	.0	A B C D E E^ F

NOTE : TR=TRUCK LOADING , LA=LANE LOADING , IN=INTERSTATE LOADING

EXAMPLE PROBLEM

TABLE 10.10 SHEAR CONNECTOR SPACING GIRDER NO. 1

GIRDER NO. 1 LOAD FACTOR DESIGN (UNFACTORED)

SPAN NO	INCR. NO	DIST FROM L.SUPPORT (FT)	HORR. SHEAR RANGE ACTUAL (KIP/IN)	ALLOW (KIP)	CALCULATED SPACING (IN)
1	0	.00	1.26	24.34	19.39
1	1	17.00	1.17	24.34	20.75
1			1.17	24.34	20.75
1	2	34.00	1.13	24.34	21.55
1			1.13	24.34	21.55
1	3	50.99	1.16	24.34	20.98
1			1.16	24.34	20.98
1	4	67.99	.00	24.34	******
1			.00	24.34	******
1	5	84.99	.00	24.34	******
2	0	.00	.00	24.34	******
2	1	17.00	.00	24.34	******
2			.00	24.34	******
2	2	34.00	1.18	24.34	20.55
2			1.18	24.34	20.55
2	3	50.99	1.15	24.34	21.18
2			1.15	24.34	21.18
2	4	67.99	1.17	24.34	20.74
2			1.17	24.34	20.74
2	5	84.99	1.26	24.34	19.39

NOTE ****** INDICATES NO SHEAR CONNECTORS REQUIRED AT THIS POINT

EXAMPLE PROBLEM

TABLE 20.7 MAXIMUM AND ALLOWABLE STRESSES AND DESIGN LL TYPES GIRDER NO. 1

GIRDER NO. 1 LOAD FACTOR DESIGN

SPN NO	INC NO	D L FT	FROM SUPP	TOP FLANGE STRESSES BENDING KSI	ALLOW KSI	NOTA	BOT. FLANGE STRESSES BENDING KSI	ALLOW KSI	NOTB	GOV.LIVE LOADING	TOP OF CON. KSI
1	0		.00	.00	50.00	111111	.00	50.00	111111	HS	.00
1	1		17.00	-15.77	-50.00	111121	16.65	50.00	111111	HS	-.47
1				-15.77	-50.00	111121	16.65	50.00	111111	HS	-.47
1	2		34.00	-18.85	-50.00	111121	21.07	50.00	111111	HS	-.61
1				-18.85	-50.00	111121	21.07	50.00	111111	HS	-.61
1	3		50.99	-10.10	-50.00	111121	15.81	50.00	111111	HS	-.53
1				-10.10	-50.00	111121	15.81	50.00	111111	HS	-.53
1	4		67.99	19.93	50.00	111111	-12.02	-37.28	111211	HS	.00
1				7.01	50.00	111111	-5.85	-40.13	111211	HS	.00
1	5		84.99	23.37	50.00	111111	-19.52	-40.13	111211	L	.00
2	0		.00	23.37	50.00	111111	-19.52	-40.13	111211	L	.00
2	1		17.00	7.01	50.00	111111	-5.85	-40.13	111211	HS	.00
2				19.93	50.00	111111	-12.02	-37.28	111211	HS	.00
2	2		34.00	-10.10	-50.00	111121	15.81	50.00	111111	HS	-.53
2				-10.10	-50.00	111121	15.81	50.00	111111	HS	-.53
2	3		50.99	-18.85	-50.00	111121	21.07	50.00	111111	HS	-.61
2				-18.85	-50.00	111121	21.07	50.00	111111	HS	-.61
2	4		67.99	-15.77	-50.00	111121	16.65	50.00	111111	HS	-.47
2				-15.77	-50.00	111121	16.65	50.00	111111	HS	-.47
2	5		84.99	.00	50.00	111111	.00	50.00	111111	HS	.00

** SEE COMMENTS ABOUT THE COLUMNS NOTA AND NOTB ON THE FOLLOWING PAGE

EXPLANATION OF NOTA AND NOTB

NOTA FOR TOP FLANGE, NOTB FOR BOTTOM FLANGE.

FIRST DIGIT=1 ABSOLUTE VALUE (WARPING STRESS/FLEXURE STRESS) IS LESS THAN OR EQUAL TO (0.5),
FIRST DIGIT=2 ABSOLUTE VALUE (WARPING STRESS/FLEXURE STRESS) EXCEEDS (0.5), ALLOWABLE STRESS WAS NOT COMPUTED.

SECOND DIGIT=1 THE UNBRACED LENGTH IS LESS THAN 25 TIMES THE WIDTH OF THE COMPRESSION FLANGE,
SECOND DIGIT=2 THE UNBRACED LENGTH EXCEEDS 25 TIMES THE WIDTH OF THE COMPRESSION FLANGE, ALLOWABLE STRESS WAS NOT COMPUTED.

THIRD DIGIT=1 THE UNBRACED LENGTH IS LESS THAN 0.1 TIMES THE RADIUS.
THIRD DIGIT=2 THE UNBRACED LENGTH EXCEEDS 0.1 TIMES THE RADIUS, ALLOWABLE STRESS WAS NOT COMPUTED.

EXAMPLE PROBLEM

TABLE 20.8 TRANSVERSE STIFFENER REQUIREMENTS GIRDER NO. 1

GIRDER NO. 1 LOAD FACTOR DESIGN

SPN NO	INC NO	D L FT	FROM SUPP	WEB DEPTH/ THICK	NOTE	SHEAR ALLOW KIP	SHEAR MAX. KIP	STIFFENER IMIN. IN**4	STIFFENER WMIN. IN.	STIFFENER TMIN. IN.	STIFFENER SPACING IN.
1	0		.00	134.40	2	189.64	128.50	.64	2.17	.19	42.00
1	1		17.00	134.40	1	94.82	81.75	.00	.00	.00	.00
1				134.40	1	94.82	81.75	.00	.00	.00	.00
1	2		34.00	134.40	1	94.82	43.11	.00	.00	.00	.00
1				134.40	1	94.82	43.11	.00	.00	.00	.00
1	3		50.99	134.40	1	94.82	83.79	.00	.00	.00	.00
1				134.40	1	94.82	83.79	.00	.00	.00	.00
1	4		67.99	134.40	2	189.64	132.45	.64	2.17	.19	42.00
1				134.40	2	189.64	132.45	.64	2.17	.19	42.00
1	5		84.99	134.40	2	189.64	187.68	.64	2.17	.19	42.00
2	0		.00	134.40	2	189.64	187.68	.64	2.17	.19	42.00
2	1		17.00	134.40	2	189.64	132.73	.64	2.17	.19	42.00
2				134.40	2	189.64	132.73	.64	2.17	.19	42.00
2	2		34.00	134.40	1	94.82	83.75	.00	.00	.00	.00
2				134.40	1	94.82	83.75	.00	.00	.00	.00
2	3		50.99	134.40	1	94.82	41.37	.00	.00	.00	.00
2				134.40	1	94.82	41.37	.00	.00	.00	.00
2	4		67.99	134.40	1	94.82	81.79	.00	.00	.00	.00
2				134.40	1	94.82	81.79	.00	.00	.00	.00
2	5		84.99	134.40	2	189.64	128.50	.64	2.17	.19	42.00

SEE COMMENTS ABOUT *NOTE* ON THE FOLLOWING PAGE

EXPLANATION OF NOTES

ALLOWABLE SHEAR CONSIDERING STIFFENERS IF REQUIRED,

NOTE=1 TRANSVERSE INTERMEDIATE STIFFENERS ARE NOT REQUIRED,
AND MAXIMUM DESIGN SHEAR DOES NOT EXCEED VU=C*VP

NOTE=2 TRANSVERSE INTERMEDIATE STIFFENERS ARE REQUIRED.
MAXIMUM DESIGN SHEAR EXCEEDS VU=C*VP

NOTA=3 LONGITUDINAL STIFFENERS ARE REQUIRED
T < D*SQRT(FY)/36500./(1.-8.6*D0/R+34*(D0/R)**2), BUT
T > D*SQRT(FY)/73000./(1.-2.9*SQRT(D0/R)+2.2*D0/R)

NOTA=4 LONGITUDINAL STIFFENERS REQUIREMENTS ARE EXCEEDED

EXAMPLE PROBLEM

TABLE 20.10 RATING FACTOR ---------- TRUCK ---------- GIRDER NO. 1

0 GIRDER NO. 1 LOAD FACTOR DESIGN

SPAN NO	INCR NO	DIST FROM L SUPPORT (FT)	TOP FLG TRK #1	TOP FLG TRK #2	TOP FLG TRK #3	BOT FLG TRK #1	BOT FLG TRK #2	BOT FLG TRK #3	OVERALL TRK #1	OVERALL TRK #2	OVERALL TRK #3
1	0	.00	99.99	99.99	99.99	99.99	99.99	99.99	99.99	99.99	99.99
1	1	17.00	41.09	35.94	40.46	5.79	5.06	5.70	5.79	5.06	5.70
1			41.09	35.94	40.46	5.79	5.06	5.70	5.79	5.06	5.70
1	2	34.00	26.16	24.32	28.80	3.87	3.60	4.26	3.87	3.60	4.26
1			26.16	24.32	28.80	3.87	3.60	4.26	3.87	3.60	4.26
1	3	50.99	37.62	35.12	40.56	4.79	4.47	5.16	4.79	4.47	5.16
1			37.62	35.12	40.56	4.79	4.47	5.16	4.79	4.47	5.16
1	4	67.99	4.17	4.04	4.35	4.98	4.82	5.20	4.17	4.04	4.35
1			13.72	13.28	14.32	12.09	11.70	12.62	12.09	11.70	12.62
1	5	84.99	7.05	6.84	6.01	5.91	5.74	5.04	5.91	5.74	5.04
2	0	.00	7.05	6.84	6.01	5.91	5.74	5.04	5.91	5.74	5.04
2	1	17.00	13.72	13.28	14.32	12.09	11.70	12.62	12.09	11.70	12.62
2			4.17	4.04	4.35	4.98	4.82	5.20	4.17	4.04	4.35
2	2	34.00	37.62	35.13	40.57	4.79	4.47	5.17	4.79	4.47	5.17
2			37.62	35.13	40.57	4.79	4.47	5.17	4.79	4.47	5.17
2	3	50.99	26.16	24.32	28.79	3.87	3.60	4.26	3.87	3.60	4.26
2			26.16	24.32	28.79	3.87	3.60	4.26	3.87	3.60	4.26
2	4	67.99	41.07	35.92	40.44	5.79	5.06	5.70	5.79	5.06	5.70
2			41.07	35.92	40.44	5.79	5.06	5.70	5.79	5.06	5.70
2	5	84.99	99.99	99.99	99.99	99.99	99.99	99.99	99.99	99.99	99.99

EXAMPLE PROBLEM

TABLE 20.13 BRIDGE RATING SUMMARY INFORMATION

BRIDGE RATING INFORMATION FOR AASHTO TRUCK

	GIRDER NO	SPAN NO	INC. NO	LOCATION (FT)	RATING FACTOR
INVENTORY	4	2	1	18.36	1.60
OPERATING	4	2	1	18.36	2.18

BRIDGE RATING INFORMATION FOR SPECIAL TRUCKS

	GIRDER NO	SPAN NO	INC. NO	LOCATION (FT)	RATING FACTOR
TRUCK NO. 1	4	2	1	18.36	1.70
TRUCK NO. 2	4	2	1	18.36	1.66
TRUCK NO. 3	4	2	1	18.36	1.69
TRUCK NO. 4	4	2	1	18.36	1.70

TABLE 2.4.1 = MOMENTS GIRDER NO. 2
****

SPAN NO.	INCR-MENT NO.	DIST. FROM LEFT SUPT. (FT)	M O M E N T DEAD LOAD (K-FT)	S.I. DEAD LOAD (K-FT)	LL+IMPACT,LOAD TYPE=HS,L,MIL... MAXIMUM POSITIVE (K-FT)	LOAD TYPE	MAXIMUM NEGATIVE (K-FT)	LOAD TYPE
1	0	.00	.0	.0	.0	HS	.0	HS
1	1	15.20	1080.9	491.1	1271.9	HS	-168.3	HS
1	2	30.75	1616.2	735.1	1861.4	HS	-334.3	HS
1	3	46.30	1585.2	724.9	1977.0	HS	-503.4	HS
1	4	61.85	993.8	464.1	1759.1	HS	-686.4	HS
1	5	77.39	-150.8	-45.6	1244.0	HS	-897.3	HS
1	6	92.94	-1869.2	-802.1	515.5	I	-1365.1	L
1	7	108.34	-4151.2	-1793.5	.0		-2619.5	L
2	0	.00	-4151.2	-1793.5	.0		-2619.5	L
2	1	15.40	-1866.3	-801.1	514.7	I	-1357.9	L
2	2	30.94	-144.7	-43.3	1244.5	HS	-893.0	HS
2	3	46.49	1003.7	468.0	1761.8	HS	-684.0	HS
2	4	62.04	1600.3	731.0	1981.1	HS	-502.4	HS
2	5	77.59	1638.1	744.0	1873.3	HS	-334.7	HS
2	6	93.14	1110.1	503.2	1294.1	HS	-170.3	HS
2	7	108.69	.0	.0	4.2	HS	-.3	HS

TABLE 2.4.2 = MOMENT AND TORSION SUMMARY GIRDER NO. 2

SPAN NO.	INCR-MENT NO.	DIST. FROM LEFT SUPT. (FT)	BENDING MOMENT MAXIMUM (K-FT)	BENDING MOMENT MINIMUM (K-FT)	DEAD LOAD TORSION DEAD LOAD [1],(K-FT) LEFT	DEAD LOAD TORSION DEAD LOAD [1],(K-FT) RIGHT	DEAD LOAD TORSION S.I. DEAD LOAD [2],(K-FT) LEFT	DEAD LOAD TORSION S.I. DEAD LOAD [2],(K-FT) RIGHT	MAX. TOTAL (K-FT) [1+2]
1	0	.00	.0	.0	.0	-27.6	.0	-11.1	-38.7
1	1	15.20	2843.8	1403.6	27.6	-40.1	11.1	-16.4	-56.5
1	2	30.75	4212.7	2017.0	11.6	-19.1	3.4	-5.2	-24.3
1	3	46.30	4287.1	1806.7	-14.8	10.2	-10.3	10.3	-25.1
1	4	61.85	3217.0	771.4	-37.5	36.7	-22.9	23.8	60.6
1	5	77.39	1047.7	-1093.6	-45.6	52.6	-28.3	30.2	82.8
1	6	92.94	-2155.8	-4036.5	-31.2	48.4	-21.2	23.6	72.0
1	7	108.34	-5944.7	-8564.2	14.7	8.8	3.6	-.9	18.3
2	0	.00	-5944.6	-8564.1	14.7	8.8	3.6	-.9	18.3
2	1	15.40	-2152.7	-4025.3	54.2	-37.0	28.0	-25.6	82.3
2	2	30.94	1056.5	-1081.0	58.3	-51.0	34.5	-32.5	92.8
2	3	46.49	3233.5	787.7	41.9	-42.2	28.0	-26.8	69.9
2	4	62.04	4312.4	1828.9	14.6	-18.6	14.1	-13.9	-32.5
2	5	77.59	4255.3	2047.4	-15.7	8.1	-1.8	.1	-17.4
2	6	93.14	2907.4	1443.0	-37.2	21.9	-13.3	7.5	-50.5
2	7	108.69	4.3	-.2	-33.6	-27.1	-12.8	-11.0	-46.5

NOTE : LEFT IS THE TORSION ON THE LEFT SIDE OF THE NODE AND VICE VERSA.
THE DIFFERENCE BETWEEN THE TWO ARE CAUSED BY THE DIAPHRAGM.
MAX. TOTAL IS THE MAXIMUM SUM DISREGARDING THE SIGN.

TABLE 2.5.1 = SHEARS GIRDER NO. 2
******

SPAN NO.	INCR-MENT NO.	DIST. FROM LEFT SUPT. (FT)	S H E A R ,(KIP) DEAD LOAD [1]	S.I.DEAD LOAD [2]	DL+SDL= [1]+[2]	LL+IMPACT,(KIP);LOAD TYPE=HS,L,MIL MAXIMUM POSITIVE [3]	LOAD TYPE	MAXIMUM NEGATIVE [4]	LOAD TYPE	RANGE= [3]+ ABS[4]
1	0	.00	88.5	40.2	128.6	118.3	HS	-7.7	L	126.0
1	1	15.20	52.1	23.7	75.9	93.5	HS	-17.1	L	110.6
1	2	30.75	15.7	7.4	23.2	70.2	HS	-27.8	HS	98.0
1	3	46.30	-20.3	-8.7	-28.9	49.0	HS	-43.6	HS	92.6
1	4	61.85	-55.8	-24.7	-80.5	35.4	HS	-56.4	HS	91.7
1	5	77.39	-90.4	-40.6	-131.0	22.4	HS	-67.9	HS	90.3
1	6	92.94	-128.3	-56.4	-184.7	9.4	I	-88.5	L	97.9
1	7	108.34	-168.0	-72.4	-240.4	.0		-129.7	L	129.7
2	0	.00	168.2	72.4	240.6	157.0	L	.0	L	157.0
2	1	15.40	130.7	56.8	187.5	88.7	L	-9.3	I	98.0
2	2	30.94	91.5	40.9	132.4	68.1	HS	-22.3	HS	90.4
2	3	46.49	56.1	24.9	81.0	56.6	HS	-37.4	HS	94.0
2	4	62.04	20.2	8.9	29.1	41.4	HS	-51.5	HS	92.9
2	5	77.59	-16.2	-7.4	-23.6	28.2	HS	-69.8	HS	98.0
2	6	93.14	-53.6	-24.3	-77.9	17.1	L	-93.0	HS	110.1
2	7	108.69	-89.1	-40.4	-129.5	7.6	L	-118.3	HS	126.0

TABLE 2.6.1 = REACTIONS
****

GD NO.	SUPT NO	DEAD + S.I.DEAD LOAD [1];KIP	LIVE LOAD ; (KIPS) MAX. [2]	LOAD TYPE	MIN. [3]	LOAD TYPE	MAX.IM. [4]	MIN.+IM. [5]	TOTAL [1] + [2]	TOTAL [1] + [4]	TOTAL [1] + [5]
2	1	133.8	76.8	HS	-8.2	L	153.7	-16.3	211.	287.	117.
2	2	477.7	145.7	L	.0		291.4	.0	623.	769.	478.
2	3	135.6	76.8	HS	-8.1	L	153.7	-16.2	212.	289.	119.
3	1	116.6	76.4	HS	-7.1	HS	152.8	-14.2	193.	269.	102.
3	2	484.1	142.2	L	.0		284.4	.0	626.	769.	484.
3	3	115.5	76.4	HS	-7.1	HS	152.8	-14.2	192.	268.	101.

** NOTE : IMPACT FACTOR FOR REACTIONS MAY BE SPECIFIED ON INPUT

TABLE 2.7.1A= DEAD LOAD DEFLECTION AT TENTH POINT GIRDER NO. 2
****

SPAN NO	INCR. NO	DIST FROM L.SUPPORT (FT)	DEAD LOAD DEFLECTION (INCHES) STEEL (1)	SLAB+(1) (2)	SDL (3)	TOTAL (2+3)
1	1	.00	.0000	.0000	.0000	.0000
1	2	10.83	-.0708	-.2719	-.0864	-.3582
1	3	21.67	-.1282	-.4916	-.1563	-.6479
1	4	32.50	-.1652	-.6320	-.2012	-.8332
1	5	43.34	-.1787	-.6819	-.2175	-.8994
1	6	54.17	-.1692	-.6429	-.2056	-.8485
1	7	65.00	-.1386	-.5236	-.1681	-.6917
1	8	75.84	-.0955	-.3582	-.1155	-.4736
1	9	86.67	-.0522	-.1940	-.0628	-.2568
1	10	97.51	-.0164	-.0600	-.0195	-.0795
1	11	108.34	.0000	.0000	.0000	.0000
2	1	.00	.0000	.0000	.0000	.0000
2	2	10.85	-.0170	-.0625	-.0201	-.0826
2	3	21.70	-.0536	-.1993	-.0642	-.2635
2	4	32.55	-.0977	-.3666	-.1178	-.4844
2	5	43.40	-.1417	-.5357	-.1715	-.7072
2	6	54.25	-.1708	-.6491	-.2072	-.8563
2	7	65.10	-.1831	-.6990	-.2225	-.9214
2	8	75.94	-.1698	-.6499	-.2064	-.8563
2	9	86.79	-.1326	-.5086	-.1614	-.6700
2	10	97.64	-.0740	-.2844	-.0901	-.3745
2	11	108.49	.0000	.0000	.0000	.0000

TABLE 2.7.2 = MAXIMUM LIVE LOAD DEFLECTION
****

GIRDER NO.	SPAN NO.	DIST. FROM LEFT SUPT. (FT)	LL+IMPACT DEFLECTION (IN),[1]	GOVERNING LOAD TYPE TYPE=HS,L,MIL...	LIMITATION 1/800 OF SPAN LENGTH SEE NOTE:[2]	FLAG [3]
2	1	46.30	-.4638	HS	1.6251	
2	2	62.04	-.4688	HS	1.6303	
3	1	45.66	-.4206	HS	1.5964	
3	2	60.77	-.4207	HS	1.5969	

NOTE : [1] .. IMPACT FACTOR MAY BE SPECIFIED ON INPUT

[2] .. AASHTO SECTION NO. 10.6.2,

[3] .. FLAG : = LL+IMPACT DEFLECTION OKAY
** = LL+IMPACT DEFLECTION VIOLATES

TABLE 3.2B= TRANSVERSE STIFFENER REQUIREMENT AND SPACING GIRDER NO. 2

SPAN NO	INCR-MENT NO	D FROM JOINT L SUPT (FT)	NO.	YIELD STRESS Fy (KSI)	REQUIREMENT OF TRANS. STIFF. 0=NO 1=YES	C PARAMETER AASHTO EQ.10-27	ALLOWABLE MAXIMUM SPACING D0, (FT-IN)
1	0	.00	2	50.0	0	.538	6- 0
1	1	15.20	6	50.0	0	.538	6- 0
1	2	30.75	10	50.0	0	.538	6- 0
1	3	46.30	14	50.0	0	.538	6- 0
1	4	61.85	18	50.0	0	.538	6- 0
1	5	77.39	22	50.0	0	.538	6- 0
1	6	92.94	26	50.0	1	.538	6- 0
1	7	108.34	30	50.0	1	.538	6- 0
2	0	.00	30	50.0	1	.538	6- 0
2	1	15.40	34	50.0	1	.538	6- 0
2	2	30.94	38	50.0	0	.538	6- 0
2	3	46.49	42	50.0	0	.538	6- 0
2	4	62.04	46	50.0	0	.538	6- 0
2	5	77.59	50	50.0	0	.538	6- 0
2	6	93.14	54	50.0	0	.538	6- 0
2	7	108.69	58	50.0	0	.538	6- 0

TABLE 3.3C= SHEAR CONNECTOR SPACING GIRDER NO. 2
****

SPAN NO	INCR. NO	DIST FROM L.SUPPORT (FT)	Q/I (1/IN)	HORR. SHEAR RANGE ACTUAL (KIP/IN)	ALLOW (KIP)	CALCULATED SPACING (IN)
1	0	.00	.0166	1.96	32.46	16.57
1	1	15.20	.0166	1.72	32.46	18.87
1	2	30.75	.0166	1.62	32.46	20.01
1	3	46.30	.0166	1.53	32.46	21.17
1	4	61.85	.0166	1.52	32.46	21.37
1	5	77.39	.0166	1.49	32.46	******
1	6	92.94	.0152	1.33	32.46	******
1	7	108.34	.0152	1.49	32.46	******
2	0	.00	.0152	1.34	32.46	******
2	1	15.40	.0152	1.33	32.46	******
2	2	30.94	.0166	1.50	32.46	******
2	3	46.49	.0166	1.56	32.46	20.86
2	4	62.04	.0166	1.54	32.46	21.10
2	5	77.59	.0166	1.62	32.46	20.01
2	6	93.14	.0166	1.72	32.46	18.91
2	7	108.69	.0166	1.96	32.46	16.57

NOTE ****** INDICATES NO SHEAR CONNECTORS REQUIRED AT THIS POINT

TABLE 3.4A = REQUIREMENT OF BOT. FLANGE LONGITUDINAL STIFFENERS GIRDER 2

SP NO	IN D NO L	FROM SUPT (FT)	JOINT NO.	BOTTOM FLANGE ----(IN)---- b	t	T=TENSION C=COMPRES.	45 <=> b/t <=> 60	REQUIREMENT OF LONG. STIFF. 0=NO , 1=YES
1	0	.00	2	60.0	.5000	T		
1	1	15.20	6	60.0	.5000	T		
1	2	30.75	10	60.0	.5000	T		
1	3	46.30	14	60.0	.5000	T		
1	4	61.85	18	60.0	.5000	T		
1	5	77.39	22	60.0	.5000	C	45 < 120.0 > 60	1
1	6	92.94	26	60.0	1.3750	C	45 > 43.6 < 60	0
1	7	108.34	30	60.0	1.3750	C	45 > 43.6 < 60	0
2	0	.00	30	60.0	1.3750	C	45 > 43.6 < 60	0
2	1	15.40	34	60.0	1.3750	C	45 > 43.6 < 60	0
2	2	30.94	38	60.0	.5000	C	45 < 120.0 > 60	1
2	3	46.49	42	60.0	.5000	T		
2	4	62.04	46	60.0	.5000	T		
2	5	77.59	50	60.0	.5000	T		
2	6	93.14	54	60.0	.5000	T		
2	7	108.69	58	60.0	.5000	T		

AASHTO "CURVED GIRDER BRIDGE SPECIFICATIONS", ART. 1.28.(B).(4), pp. B40

** The b/t ratio preferably should not exceed 60. Should b/t ratio exceed 45, longitudinal stiffeners should be considered.

TABLE 3.6 = MAXIMUM AND ALLOWABLE STRESSES, AND DESIGN LL TYPES GIRDER 2

WORKING STRESS DESIGN
GIRDER NO. 2

SPN NO	INC NO	D L	FROM SUPP FT	TOP FL. STRESS DESIGN KSI	TOP FL. STRESS ALLOW KSI	BOT. FL. STRESS DESIGN KSI	BOT. FL. STRESS ALLOW KSI	GOV.LIVE RANGE KSI	LOADING
1	0		.00	.66	27.50	.00	27.49		
1	1		15.20	-7.07	-27.50	9.51	27.48		
1	2		30.75	-10.24	-27.50	14.09	27.49		
1	3		46.30	-10.20	-27.50	14.29	27.49		
1	4		61.85	-7.19	-27.50	10.56	27.48		
1	5		77.39	5.03	27.50	-4.11*	-3.91		
1	6		92.94	9.92	27.50	-7.34	-24.15		
1	7		108.34	20.46	27.50	-15.58	-24.15		
2	0		.00	20.47	27.50	-15.58	-24.15		
2	1		15.40	9.88	27.50	-7.32	-24.15		
2	2		30.94	4.93	27.50	-4.06*	-3.90		
2	3		46.49	-7.27	-27.50	10.62	27.48		
2	4		62.04	-10.32	-27.50	14.38	27.49		
2	5		77.59	-10.35	-27.50	14.24	27.49		
2	6		93.14	-7.26	-27.50	9.72	27.49		
2	7		108.69	-.66	27.50	.01	-3.96		

TABLE 10.11 RATING FACTOR GIRDER NO. 2

GIRDER NO. 2 WORKING STRESS DESIGN

SPAN NO	INCR NO	DIST FROM L SUPPORT (FT)	TOP FLG INVENT.	TOP FLG OPERAT.	BOT FLG INVENT.	BOT FLG OPERAT.	OVERALL INVENT.	OVERALL OPERAT.
1	0	.00	99.99	99.99	99.99	99.99	99.99	99.99
1	1	15.20	18.87	27.62	5.68	8.29	5.68	8.29
1	2	30.75	11.26	17.21	3.37	5.15	3.37	5.15
1	3	46.30	10.69	16.29	3.20	4.87	3.20	4.87
1	4	61.85	13.35	19.44	4.17	6.05	4.17	6.05
1	5	77.39	7.31	10.12	.94	1.36	.94	1.36
1	6	92.94	6.40	9.48	7.77	11.30	6.40	9.48
1	7	108.34	2.17	3.83	2.80	4.64	2.17	3.83
2	0	.00	2.17	3.83	2.80	4.64	2.17	3.83
2	1	15.40	6.49	9.61	7.81	11.37	6.49	9.61
2	2	30.94	7.49	10.37	.95	1.37	.95	1.37
2	3	46.49	13.09	19.07	4.15	6.03	4.15	6.03
2	4	62.04	10.44	15.94	3.17	4.85	3.17	4.85
2	5	77.59	11.21	17.17	3.33	5.09	3.33	5.09
2	6	93.14	18.10	26.55	5.55	8.11	5.55	8.11
2	7	108.69	99.99	99.99	99.99	99.99	99.99	99.99

TABLE 10.13 BRIDGE RATING SUMMARY INFORMATION

BRIDGE RATING INFORMATION FOR ASSHTO TRUCK
****

	GIRDER NO	SPAN NO	INC. NO	LOCATION (FT)	RATING FACTOR
INVENTORY	2	1	5	77.39	.94
OPERATING	2	1	5	77.39	1.36

TABLE 2.10.2 = STRESS RANGE WITH ACCEPTABLE CATEGORY GIRDER NO. 2

****

FATIGUE --- SERVICE LOADING

(1) : MAIN (LONGITUDINAL) LOAD CARRYING MEMBERS
(2) : ROAD TYPE = I --- AASHTO TABLE 10.3.2A
(3) : STRESS CYCLES -- AASHTO TABLE 10.3.1A

TRUCK LOADING = 2,000,000 CYCLES
LANE LOADING = 500,000 CYCLES

			TOP OF TOP FLANGE			BOTTOM OF BOTTOM FLANGE		
SP NO	IN NO	D FROM L SUPT (FT)	GOVERN. LOADING	STRESS RANGE (KSI)	ACCEPTABLE STRESS CATEGORY	GOVERN. LOADING	STRESS RANGE (KSI)	ACCEPTABLE STRESS CATEGORY
1	0	.00	TR	.0	A B C D E E^ F	TR	.0	A B C D E E^ F
1	1	15.20	TR	1.7	A B C D E E^ F	TR	4.5	A B C D E E^ F
1	2	30.75	TR	2.7	A B C D E E^ F	TR	6.9	A B C D E F
1	3	46.30	TR	3.4	A B C D E E^ F	TR	7.9	A B C D E F
1	4	61.85	TR	3.9	A B C D E E^ F	TR	7.9	A B C D E F
1	5	77.39	TR	4.2	A B C D E E^ F	TR	7.1	A B C D E F
1	6	92.94	LA	3.2	A B C D E E^ F	LA	3.0	A B C D E E^ F
1	7	108.34	LA	5.7	A B C D E E^ F	LA	4.8	A B C D E E^ F
2	0	.00	LA	5.7	A B C D E E^ F	LA	4.8	A B C D E E^ F
2	1	15.40	LA	3.2	A B C D E E^ F	LA	3.0	A B C D E E^ F
2	2	30.94	TR	4.2	A B C D E E^ F	TR	7.1	A B C D E F
2	3	46.49	TR	3.9	A B C D E E^ F	TR	7.9	A B C D E F
2	4	62.04	TR	3.4	A B C D E E^ F	TR	7.9	A B C D E F
2	5	77.59	TR	2.7	A B C D E E^ F	TR	6.9	A B C D E F
2	6	93.14	TR	1.7	A B C D E E^ F	TR	4.5	A B C D E E^ F
2	7	108.69	TR	.0	A B C D E E^ F	TR	.0	A B C D E E^ F

NOTE : TR=TRUCK LOADING , LA=LANE LOADING , IN=INTERSTATE LOADING